Turpanic Co, Ltd
Email: johnny@turpanic.com
Mob/WeChat/WhatsApp: +8613088887527

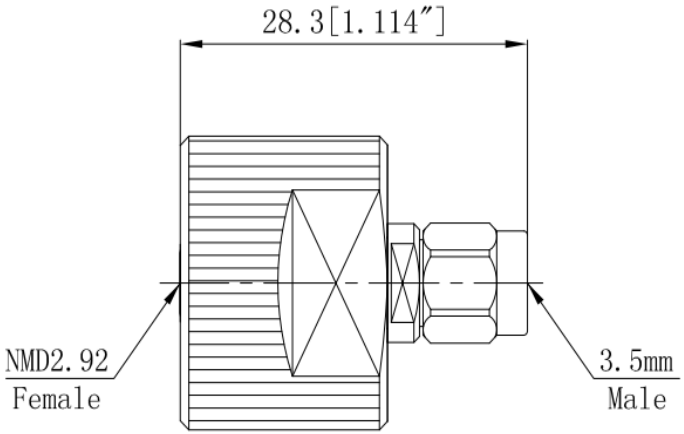

Electrical & Environmental Characteristics	
Impedance	50 Ohm
Insulation Resistance	5000 MΩ
Operating Frequency	DC-33GHz
Dielectric Withstanding Voltag	1000V
VSWR	≤1.2
Insertion Loss	≤0.05*Sqt(f_GHz)
Operating Temperature	- 55~+165℃
Material & Coat-Plating	
Inner Conductor	Beryllium bronze gilding
Dielectric	PEI
	Passivation of stainless steel

THIS DRAWING IS A CONTROLLED DOCUMENT		DWN	Turpanic Co, Ltd ,Inc
		CHK	
Unit mm	TOLERANCES UNLESS OTHERWISE SPECIFIED 0 PLC ±0.25 1 PLC ±0.15 2 PLC ±0.12 3 PLC ±- 3 PLC ±- ANGLES ±1°	APVD	Product Model NMD2.92F3.5M NMD2.92 Female 3.5 Male Connector
		PRODUCT SPEC	
		APPLICATON SPEC	
MATEIAL SEE TABLE	FINISH SEE TABLE	WEIGHT	SIZE A4 / GAGE CODE 0T8L4 / DRAWING NO
		CUSTOMER DRAWING	SCALE 4: 1 SCALE 4: 1 SHEET1 OF 1 RVE 1

© 2014 TURPANIC